THE INFORMATION CONTAINED IN THIS DRAWING IS THE SOLE PROPERTY OF denoonsp. ANY REPRODUCTION IN PART OR WHOLE WITHOUT THE WRITTEN PERMISSION OF denoonsp IS PROHIBITED.

DRAWING IS THIRD ANGLE PROJECTION

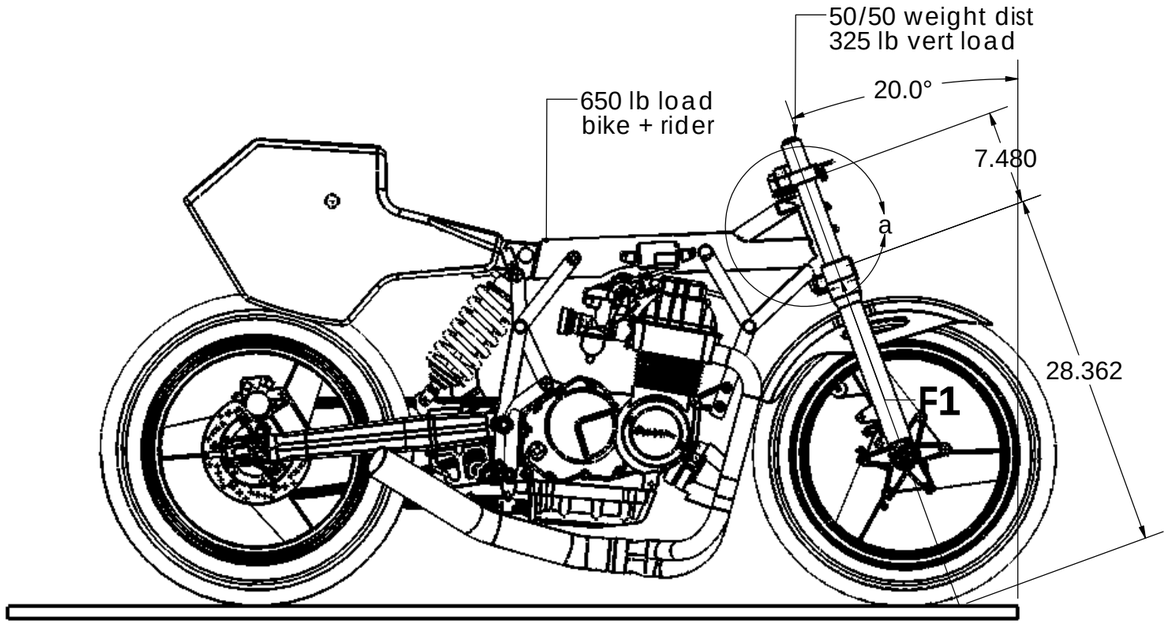

Step 1 - Assuming:

1. 650 lb load
2. 20 degree rake
3. 50/50 weight distibution

F1= 325 lbs/ Cos 20 degrees
F1 = 325/.9397 = 345lbs static load

Step 2 - Assuming:

1. 1G of decelleration
2. A virtual pivot at center of steering head
3. F2 = 650 lbs(Mass @ 1 G)

F3= 650 lbs X 32.5" = 21125

Due to 100% weight transfer, F1 increases to ~650 lbs

STEP 2

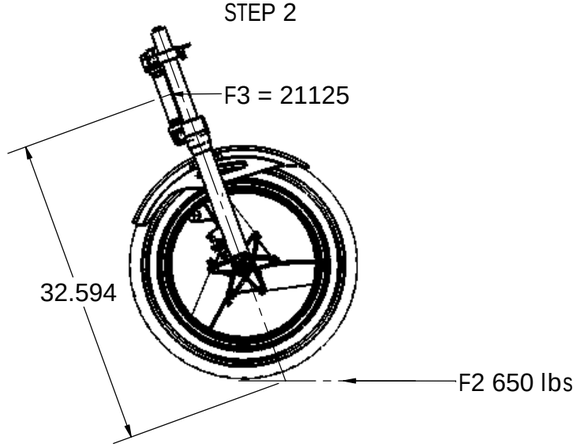

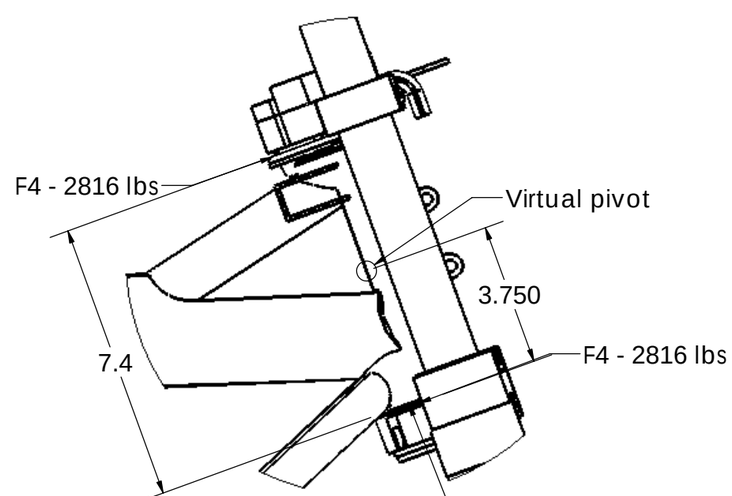

DETAIL a
SCALE 1 : 4

Step 3

F4 = F3 / 7.5

F4 = 21125 / 7.5 = 2816

Actual Dynamic Loads may be 5 to 6 X the calculated static load

REV.	DESCRIPTION	DATE	AUTHORITY

REVISIONS

PARTS LIST

UNLESS OTHERWISE SPECIFIED DIMENSIONS ARE IN INCHES
UNLESS OTHERWISE SPECIFIED ALL DIMENSIONS ARE BASIC

MATERIAL

FINISH
N/A

DO NOT SCALE DRAWING

CAD GENERATED DRAWING, DO NOT MANUALLY UPDATE

APPROVALS	DATE
DRAWN RAD	6/11/2011

General Tolerances for Untoleranced Dimensions
X = ± 0.1253
X.X = ± 0.0625
X.XX = ± 0.03125
X.XXX = ± 0.010

denoon sp

Description

SIZE B | Part No. Egli2hawkfox | REV.

SCALE 1:16 | CAD FILE: | SHEET 1 OF 1